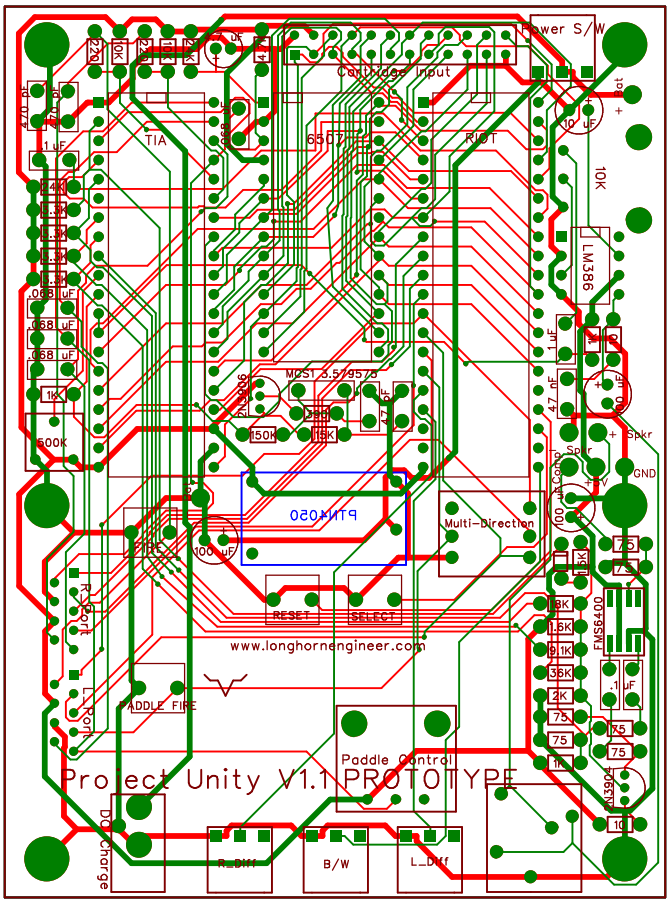C:\Documents and Settings\Parker\Desktop\Project Unity\board_outline (Visible layers) Scale=1.00 Tue Dec 29 22:03:25 2009